Base Cabinet *1 Door, 1 Drawer*

Step-by-Step Assembly Instructions

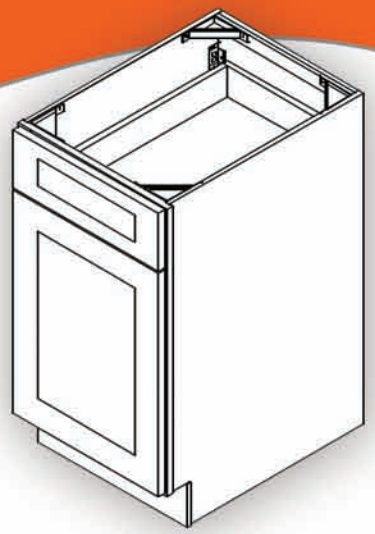

Code	Item	Qty
A	R/L SIDE PANEL	2
C	DRAWER L/R SIDE PANEL	2
D	BOTTOM PANEL	1
E	DRAWER BACK PANEL	1
F	DRAWER BOTTOM PANEL	1
G	SHELF	1
H	BACK PANEL	1
J	TOE KICK PLATE	1
K	DRAWER GLIDE-CABINET	2
L	DRAWER GLIDE-DRAWER	2
M	FRONT FACE	1
N	DRAWER FRONT PANEL	1
T	REAR SLIDE BRACKET	2
U	PLASTIC SHELF CLIPS	4

-Easy Assembly-
Metal Clip System
-Easy Assembly-

- Align clips ❶ and ❷
- Slide ❶ into ❷

- Insert locking screw into clip pair
- Tighten all screws

Step 1

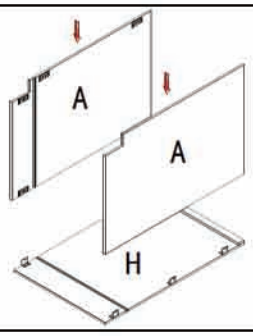

- Lay **H** flat; grooves facing upward
- Insert **A** into metal clips of **H** (refer to Metal Clip System)

Step 2

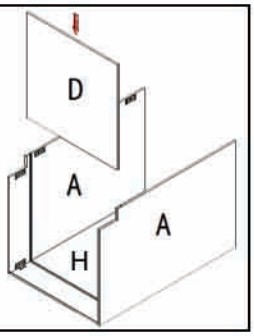

- Slide **D** into grooves of **A** and **H**

Step 3

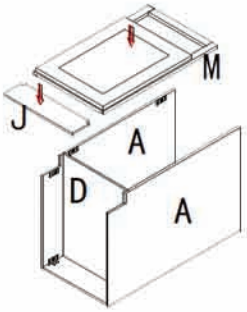

- Attach **M** onto **D** and **A** (refer to Metal Clip System)
- Attach **J** onto bottom front of **A** using the Metal Clip System

Step 4

drawer box assembly

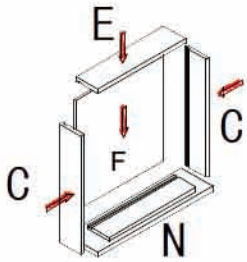

- Align **C** R/L with **E** so that the grooves line up and screw together
- Slide **F** into grooves of **C** & **E**
- Align **N** to **C** & **F** and tighten with screw

Flip this page for steps 5-8 ➡

Base Cabinet *1 Door, 1 Drawer*

Step-by-Step Assembly Instructions

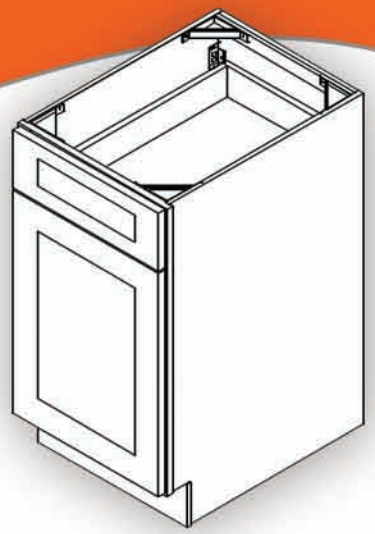

Code	Item	Qty
A	R/L SIDE PANEL	2
C	DRAWER L/R SIDE PANEL	2
D	BOTTOM PANEL	1
E	DRAWER BACK PANEL	1
F	DRAWER BOTTOM PANEL	1
G	SHELF	1
H	BACK PANEL	1
J	TOE KICK PLATE	1
K	DRAWER GLIDE-CABINET	2
L	DRAWER GLIDE-DRAWER	2
M	FRONT FACE	1
N	DRAWER FRONT PANEL	1
T	REAR SLIDE BRACKET	2
U	PLASTIC SHELF CLIPS	4

-Easy Assembly- Metal Clip System -Easy Assembly-

- Align clips ❶ and ❷
- Slide ❶ into ❷

- Insert locking screw into clip pair
- Tighten all screws

Step 5

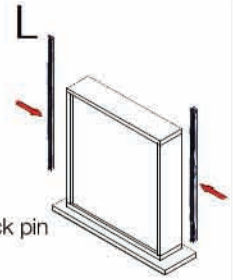

- Separate K and L of the draw slide by extending slide and push down on black pin
- Attach drawer slide L to the pre drilled holes on the two sides of C

Step 6

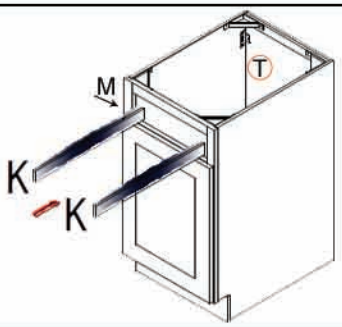

- Screw both rear brackets (T) into the pre-drilled holes in H so that angle faces inward
- Install K by sliding into T and screwing into side of M

Step 7

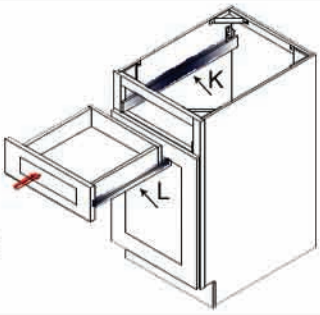

- Slide drawer box into cabinet so that L slides into K

Step 8

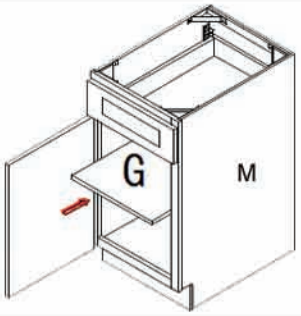

- Insert shelf clips (U) into the pre-drilled holes on M
- Slide shelf (G) making sure the front edge faces out

Flip this page for steps 1-4 ➡